ALIENWARE® M17x
MOBILE MANUAL

Notes, Cautions, and Warnings

NOTE: A NOTE indicates important information that helps you make better use of your computer.

CAUTION: A CAUTION indicates either potential damage to hardware or loss of data and tells you how to avoid the problem.

WARNING: A WARNING indicates a potential for property damage, personal injury, or death.

This item incorporates copy protection technology that s protected by U.S patents and other intellectual property rights of Rovi Corporation. Reverse engineering and disassembly are prohibited.

The contents herein are subject to change without notice.

© 2011 Dell Inc. All rights reserved.

Reproduction of these materials in any manner whatsoever without the prior written permission of Dell Inc. is strictly prohibited.

Trademarks used in this manual: Alienware, AlienFX, and the AlienHead logo are trademarks or registered trademarks of Alienware Corporation; Dell is a trademark of Dell Inc.; Microsoft and Windows are either trademarks or registered trademarks of Microsoft Corporation in the United States and/or other countries; Intel and Intel SpeedStep are registered trademarks and Core is a trademark of Intel Corporation in the U.S. and other countries; Blu-ray Disc is a trademark of the Blu-ray Disc Association; Bluetooth is a registered trademark owned by Bluetooth SIG, Inc.; Phoenix FailSafe is a trademark of Phoenix Technologies Ltd.

Other trademarks and trade names may be used in this manual to refer to either the entities claiming the marks and names or their products. Dell Inc. disclaims any proprietary interest in trademarks and trade names other than its own.

Regulatory Model: P01E **Regulatory Type: P01E002**

P/N: W3D7V **Rev. A01** **October 2011**

CONTENTS

INTRODUCTION 5

CHAPTER 1: SETTING UP YOUR LAPTOP 7
- Before Setting Up Your Laptop 8
- Connect the AC Adapter 9
- Press the Power Button 9
- Set Up Microsoft Windows 10
- Connect to the Internet (Optional) 10

CHAPTER 2: GETTING TO KNOW YOUR LAPTOP 13
- Front View Features 14
- Back View Features 14
- Left View Features 15
- Right View Features 16
- Display Features 17
- Computer Base and Keyboard Features 18
- Status Lights 19
- Touch Controls 19
- Power Button 20
- Function Keys 21

CHAPTER 3: USING YOUR LAPTOP 23
- Connecting External Displays 24
- Using Removable Media and Cards 25
- Using the Optical Drive 25
- Using the Integrated Camera 26
- Using the Wireless Control 26
- Battery Pack 26
- Power Management 26
- Alienware Command Center 27
- Stealth Mode 27
- Free Fall Sensor 28
- Configuring the BIOS 28

CHAPTER 4: INSTALLING ADDITIONAL OR REPLACEMENT COMPONENTS 33
- Before You Begin 34
- Replacing the Battery Pack 36
- Upgrading or Replacing Memory 37
- Upgrading or Replacing the Hard Drive(s) 39

CHAPTER 5: TROUBLESHOOTING 43
Basic Hints and Tips 44
Backup and General Maintenance 44
Software Diagnostic Tools 45
Answers to Common Problems 47

CHAPTER 6: SYSTEM RECOVERY 51
AlienRespawn/DataSafe Local Backup 52
DataSafe Online Backup 53
My Dell Downloads 54

CHAPTER 7: BASIC SPECIFICATIONS 55

APPENDIX A: GENERAL AND ELECTRICAL SAFETY PRECAUTIONS 59

APPENDIX B: CONTACTING ALIENWARE 61

INTRODUCTION

Dear Valued Alienware Customer,

Welcome to the Alienware family. We are thrilled to include you among the growing number of savvy high-performance computer users.

The Alienware technicians who have crafted your computer have made certain that your high-performance computer is properly optimized and performs to its fullest potential. We build computers with a single unwavering purpose: Build It As If It Were Your Own. The technicians will not rest until your new computer meets or exceeds our very demanding criteria!

We have tested your computer extensively in order to ensure that you enjoy the highest levels of performance. In addition to a standard burn-in period, your computer has been evaluated using real-world tools such as synthetic performance benchmarks.

We invite you to share your experience with your new high-performance computer with us, so do not hesitate to either e-mail or call Alienware with any questions or concerns. The entire staff shares your enthusiasm for new technology and we hope that you enjoy using your new computer as much as Alienware enjoyed building it for you.

Sincerely,

Alienware Staff

CHAPTER 1: SETTING UP YOUR LAPTOP

Before Setting Up Your Laptop

Congratulations on the purchase of your Alienware® M17x!

Read all safety and setup instructions before connecting your new laptop. Begin by carefully opening the box and removing all components that were shipped to you. Before setting up your laptop or components, be sure to inspect all items for any physical damage that may have occurred during shipment. Be sure to report any damaged items to customer service immediately upon receiving your shipment. You must report shipping damage within the first 5 days of receiving the shipment or your damage report will not be honored.

Before setting up your laptop or components, see the included invoice to verify that all items ordered are present. Report any missing components to customer service within 5 days of receiving the shipment. Anything reported missing after the first 5 days of receiving a shipment will not be honored. Some of the most common items to check for include:

- Laptop and AC adapter with power cable
- Microsoft CD-key located at the bottom of the laptop
- Monitor with power cable and video cable (if ordered)
- Keyboard (if ordered)
- Mouse (if ordered)
- Multimedia speakers and sub-woofer (if ordered)
- Joystick controllers (if ordered)

You may also need a small flathead and/or a Phillips head screwdriver for connecting peripheral cables to the laptop.

Product Documentation and Media

The documentation that ships with your Alienware® laptop is designed to provide answers to many of the questions that may arise as you explore your new laptop's capabilities. You may see the documentation for technical information or general use as needed to answer questions in the future, or aid you in finding answers and solutions. The media included with your laptop is referenced in some sections of the documentation and may be needed to complete certain tasks. As always, our technical support staff is available to assist you.

Placing Your Laptop

WARNING: Do not place the laptop near or over a radiator or heating vent. If your laptop is placed in a cabinet, ensure that adequate ventilation is provided. Do not place the laptop in a humid location or in any area where the laptop may be exposed to rain or water. Be careful not to spill liquid of any kind on or into the laptop.

When placing your laptop, ensure that:

- It is placed on a surface that is both level and stable.
- The power and other cable connectors are not jammed between the laptop and a wall – or any other object.
- Nothing obstructs airflow in front of, behind, or below the laptop.
- The laptop has enough room so that optical drives and other external storage drives can be easily accessed.

Connect the AC Adapter

WARNING: The AC adapter works with electrical outlets worldwide. However, power connectors and power strips vary among countries. Using an incompatible cable or improperly connecting the cable to a power strip or electrical outlet may cause fire or equipment damage.

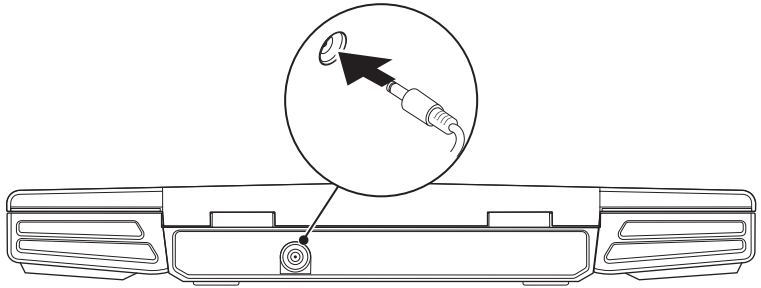

NOTE: The AC adapter should be connected to the laptop for maximum gaming performance.

Press the Power Button

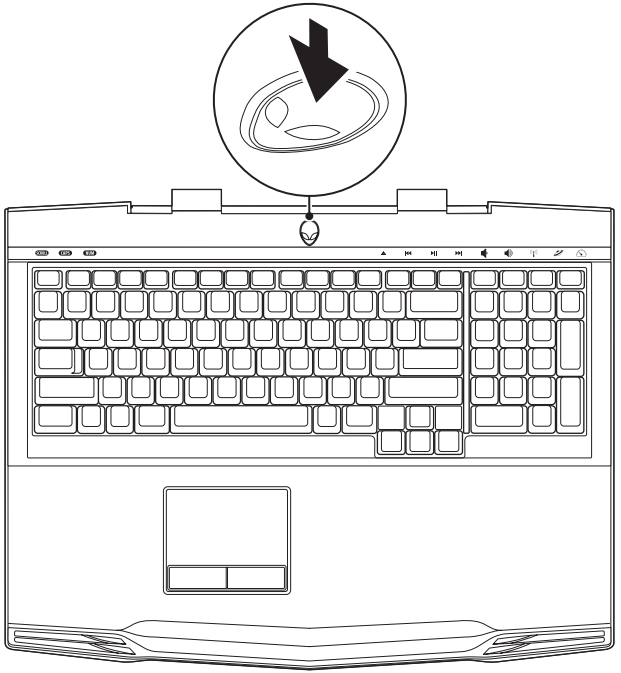

Set Up Microsoft Windows

CAUTION: Do not interrupt the operating system's setup process. Doing so may render your computer unusable.

Your computer is preconfigured with the operating system you requested while ordering your computer. To configure the remaining settings, follow the instructions on the screen.

NOTE: For optimal performance of your computer, it is recommended that you download and install the latest BIOS and drivers for your computer available at **support.dell.com**.

NOTE: For more information on the operating system and features, see **support.dell.com/MyNewDell**.

NOTE: It is recommended that you create a full system backup as soon as you set up Microsoft Windows. To create a full system backup, see "AlienRespawn/DataSafe Local Backup" on page 52.

Connect to the Internet (Optional)

Setting Up a Wired Connection

- If you are using a dial-up connection, connect the telephone line to the optional external USB modem and to the telephone wall jack before you set up your Internet connection.
- If you are using a DSL or cable/satellite modem connection, contact your ISP or cellular telephone service for setup instructions.

To complete setting up your wired Internet connection, follow the instructions in "Setting Up Your Internet Connection" on page 11.

Setting Up a Wireless Connection

NOTE: To set up your wireless router, see the documentation that shipped with your router.

Before you can use your wireless Internet connection, you need to connect to your wireless router.

To set up your connection to a wireless router:

1. Ensure that wireless is enabled on your computer.
2. Save and close any open files, and exit any open programs.
3. Click **Start** → **Control Panel** → **Network and Sharing Center** → **Connect to a network**.
4. Follow the instructions on the screen to complete the setup.

Setting Up Your Internet Connection

ISPs and ISP offerings vary by country. Contact your ISP for offerings available in your country.

If you cannot connect to the Internet but have successfully connected in the past, the Internet Service Provider (ISP) might have a service outage. Contact your ISP to check the service status, or try connecting again later.

Have your ISP information ready. If you do not have an ISP, the **Connect to the Internet** wizard can help you get one.

1. Save and close any open files, and exit any open programs.
2. Click **Start** → **Control Panel**.
3. Click **Network and Internet** → **Network and Sharing Center** → **Set up a new connection or Network** → **Connect to the Internet**.
   The **Connect to the Internet** window appears.

NOTE: If you do not know which type of connection to select, click **Help me choose** or contact your ISP.

4. Follow the instructions on the screen and use the setup information provided by your ISP to complete the setup.

CHAPTER 2: GETTING TO KNOW YOUR LAPTOP

This chapter provides information about your new laptop to familiarize you with its various features, and get you up and running quickly.

Front View Features

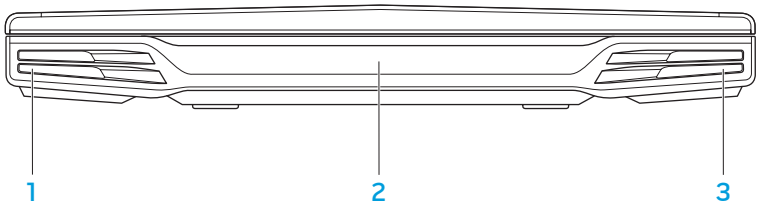

1 **Left speaker** — Combines with the right speaker to provide high quality stereo sound.

2 **Consumer IR port** — Connects to devices using infrared.

3 **Right speaker** — Combines with the left speaker to provide high quality stereo sound.

Back View Features

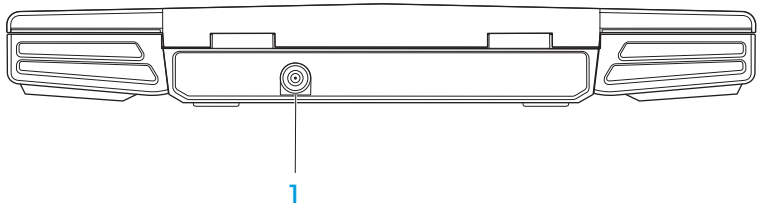

1 **AC adapter connector** — Connects to the AC adapter to power the computer and charge the battery.

Left View Features

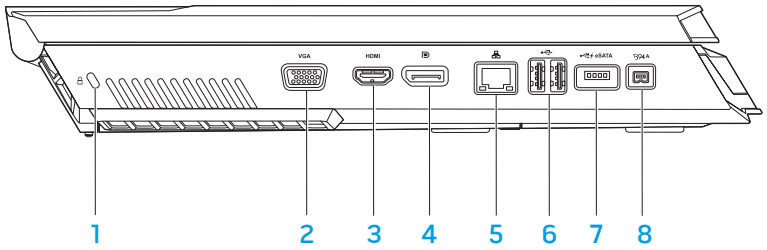

1 **Security cable slot** — Attaches a commercially available security cable to the computer.

NOTE: Before you buy a security cable, ensure that it works with the security cable slot on your computer.

2 **VGA connector** — Connects to video devices, such as a monitor or projector.

3 **HDMI connector** — Connects to a TV for both audio and video signals.

NOTE: For a monitor without built-in speakers, only the video signal will be read.

4 **DisplayPort connector** — Connects your computer to external monitors and projectors with DisplayPort.

5 **Network connector** — Connects your computer to a network or broadband device.

6 **USB connectors (2)** — Connect to USB devices, such as a mouse, keyboard, printer, external drive, or MP3 player.

7 **USB/eSATA combo connector with USB PowerShare** — Connects to eSATA compatible storage devices (such as external hard drives or optical drives) or USB devices (such as a mouse, keyboard, printer, external drive, or MP3 player).
The USB Powershare feature allows you to charge USB devices when the computer is turned off or in standby mode. If you turn off your computer while charging a USB device, the device will stop charging. To continue charging, disconnect the USB device and connect it again.

NOTE: Certain USB devices may not charge when the computer is turned off or in standby mode. In such cases turn on the computer to charge the device.

8 **IEEE 1394 A connector** — Connects to high-speed serial multimedia devices such as digital video cameras.

Right View Features

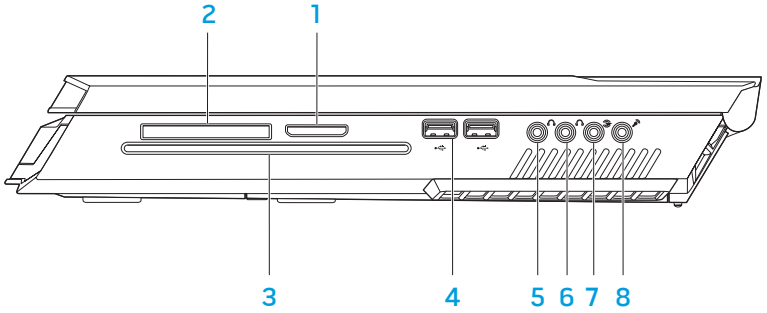

1 **8-in-1 Media Card Reader** — Provides a fast and convenient way to view and share digital photos, music, videos, and documents.

2 **ExpressCard slot** — Provides support for additional memory, wired and wireless communications, multimedia, and security features. The slot supports 54 mm Express cards.

NOTE: The ExpressCard slot is designed only for ExpressCards. The slot does NOT support PC Cards.

3 **Optical drive** — Plays or records only standard-size (12 cm) CDs, DVDs, and Blu-ray Discs (optional). Ensure that the side with print or writing is facing upward when inserting discs. For more information, see "Using the Optical Drive" on page 25.

4 **USB connectors (2)** — Connect to USB devices, such as a mouse, keyboard, printer, external drive, or MP3 player.

5 **Audio out/Headphone connector** — Connects to front L/R speakers or headphones.

6 **Audio out/Headphone connector** — Connects to a center speaker/ subwoofer or headphones.

7 **Rear L/R surround connector** — Connects to rear L/R surround speakers.

8 **Audio in/Microphone connector** — Connects to a microphone for voice or audio input into a sound or telephony program.

Display Features

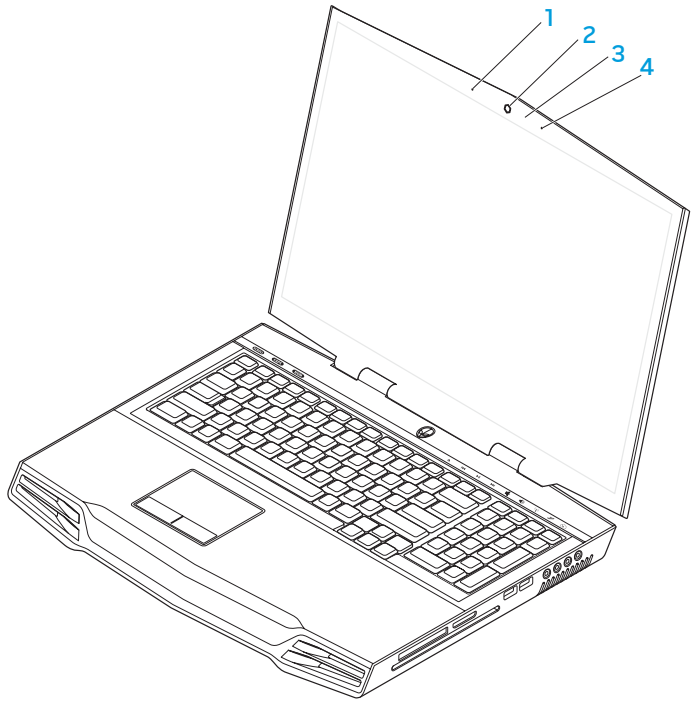

1 **Left digital-array microphone** — Combines with the right digital-array microphone to provide high quality sound for video chatting and voice recording.

2 **Camera** — Built-in camera for video capture, conferencing, and chat.

3 **Camera activity indicator** — Indicates if the camera is on or off.

4 **Right digital-array microphone** — Combines with the left digital-array microphone to provide high quality sound for video chatting and voice recording.

Computer Base and Keyboard Features

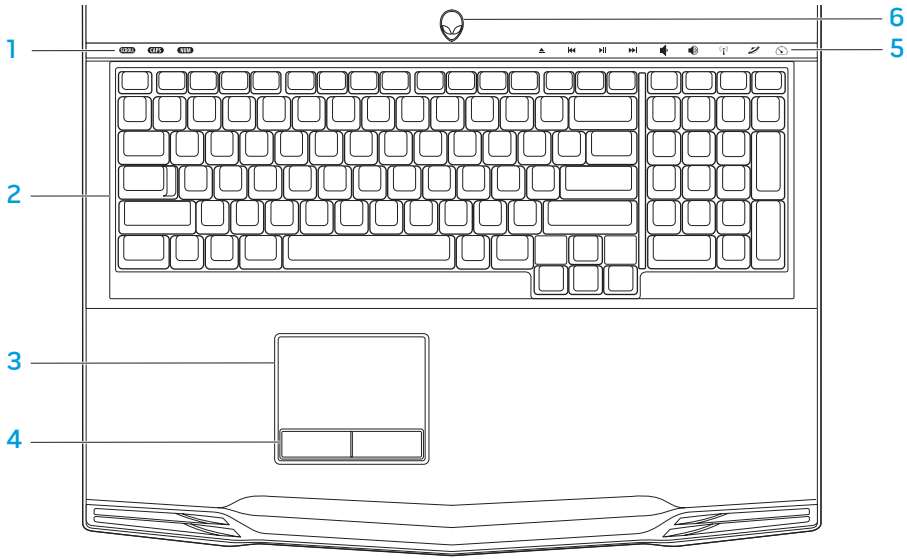

1 **Status lights (3)** — Indicate if the Scroll Lock, Caps Lock, or Number Lock lights are turned on or off.

2 **Keyboard** — The backlit keyboard provides visibility in dark environments by illuminating all symbols on the keys.

3 **Touch pad** — Provides the functionality of a mouse to move the cursor, drag or move selected items, and left-click by tapping the surface.

4 **Touch pad buttons (2)** — Provide left- and right-click functions like those on a mouse.

5 **Touch controls (9)** — Touching the touch controls perform the associated action. For more information, see "Touch Controls" on page 19.

6 **Power button** — Turns the computer on or off when pressed. For more information, see "Power Button" on page 20.

Status Lights

The three status lights are located at the top-left side of the keyboard. For the exact location, see "Computer Base and Keyboard Features" on page 18.

Scroll Lock Light
Turns on when the scroll lock option is on.

Caps Lock Light
Turns on when the keyboard is in Caps Lock mode.
In this mode, all characters you type are in uppercase.

Number Lock Light
Turns on when the keyboard is in Num Lock mode.
In this mode, the embedded numeric keypads can be used.

Touch Controls

The touch controls are located at the top of the keyboard. For the exact location, see "Computer Base and Keyboard Features" on page 18. To activate, gently touch the desired control. The control will illuminate temporarily to confirm your selection.

Eject

Rewind or Play previous track

Play or Pause

Fast Forward or Play next track

Decrease volume

Increase volume

Wireless Control - Switch wireless communications on/off
(for more information, see "Using the Wireless Control" on page 26)

Alienware Command Center
(for more information, see "Alienware Command Center" on page 27)

Stealth Mode - Switch computer to low power state
(for more information, see "Stealth Mode" on page 27)

Power Button

You can program this button to perform actions like shutting down the operating system or entering the standby mode. For details on how to program this button, see **Power Options** in the Control Panel of Microsoft® Windows® operating system.

The power button is located in the center of the hinge cover. For the exact location, see "Computer Base and Keyboard Features" on page 18.

The color of the AlienHead rim indicates the power status. The color indicating the power status can be changed through the AlienFX® software.

On AC adapter:

Blue or custom AC-color	The battery is fully charged.
Blue or custom AC-color fading into amber or custom battery-color	The battery is charging.
Blue or custom AC-color fading into black	The computer is in standby mode.

On battery:

Amber or custom battery-color	The battery is fully charged.
Amber or custom battery-color fading into black	The computer is in standby mode.
Blinking Amber or custom battery-color	The battery charge is low.

For more details on standby and hibernate mode, see the **Power Options** in the Control Panel of your Microsoft Windows operating system.

Function Keys

NOTE: Depending on the configuration of the laptop you purchased, some of the function keys may have no associated tasks.

The <Fn> key is located near the bottom-left corner of the keyboard, and is used together with other keys to activate certain functions. Hold down the <Fn> key along with the key described below:

F1 – Suspend Mode

Press <Fn><F1> to enable suspend mode. In the suspend mode, the display and selected devices will switch off for less energy consumption.

F2 – Check Battery Status and Battery Charge Disable/Enable

Press <Fn><F2> to toggle between the Battery Status Meter, Battery Charge Disable feature, and Battery Charge Enable feature.

F3 – Mute on/off

Press <Fn><F3> to enable or disable the mute function.

F4 – Increase Display Brightness

Press <Fn><F4> to increase the brightness of the display.

F5 – Decrease Display Brightness

Press <Fn><F5> to decrease the brightness of the display.

F6 – Extend Desktop

Press <Fn><F6> to switch between the various external display options available either simultaneously or separately.

F7 – Display Mode

Press <Fn><F7> to switch between clone mode and extended desktop mode, when an external display is connected.

F9 – Camera on/off

Press <Fn><F9> to switch off or switch on the camera.

F10 – Microsoft Mobility Center on/off

Press <Fn><F10> to launch or close the Microsoft Mobility Center application.

F11 – AlienFX® on/off

Press <Fn><F11> to disable or enable the AlienFX illumination.

F12 –Touch Pad on/off

Press <Fn><F12> to enable or disable the touch pad function and the illumination around the touch pad. When the touch pad function is switched off, the touch pad can still work temporarily for three to five seconds while the computer reboots into the Windows® operating system, or resumes from standby or hibernate mode.

CHAPTER 3: USING YOUR LAPTOP

CHAPTER 3: USING YOUR LAPTOP

Connecting External Displays

If you want to enjoy your computing environment on a bigger scale visually, or extend your desktop area, you can connect an external display such as a standalone monitor, an LCD TV, or a projector.

Connecting a Display

Use the appropriate cable based on the connectors available on your computer and display. Refer to the following table to identify the connectors on your computer and display.

Connection Type	Computer	Cable	Display
VGA-to-VGA (VGA cable)	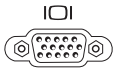	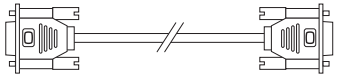	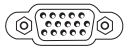
HDMI-to-HDMI (HDMI cable)			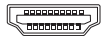
HDMI-to-DVI (HDMI-to-DVI adapter + DVI cable)		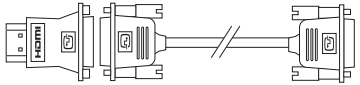	
DisplayPort-to-DisplayPort (DisplayPort cable)			

1. Turn off your laptop.
2. Turn off the display and disconnect it from the power supply.
3. Connect one end of the display cable to the DisplayPort, HDMI, or VGA connector on your Alienware laptop.
4. Connect the other end of the cable to the same connector on your display.
5. If necessary, connect one end of the power cable to the display's power connector.
6. Connect the other end of the power cable to a grounded three-prong power strip or wall outlet.
7. Turn on your laptop, and then turn on your display.

Extending the Desktop

1. With the external display connected, right-click on the desktop and select **Personalize**.
2. Select **Connect to a projector or other external display** in the upper left portion of the screen.
3. Click **Connect Display**.
4. Select from the below options that appear on the screen:
   - **Duplicate my display on all displays (mirrored)**
   - **Show different parts of my desktop on each display (extended)**
   - **Show my desktop on the external display only**
5. Click **Apply** to apply your changes and then click **OK** to exit the Display Settings control panel.

Using Removable Media and Cards

Observe the safety measures below:

When no ExpressCard or Media Card (SD/MMC/MS cards) is inserted into the ExpressCard or Media Card slot, ensure that the blank cards that shipped with your laptop is inserted in the unused slot(s). The blank cards protect the unused slots from dust and other particles. When inserting a blank card, ensure that the correct side is on the top (indicated by an arrow mark on some blank cards). Inserting a blank card upside down may damage your laptop.

Using the Optical Drive

Your laptop has a slot load optical drive. Depending on the configuration ordered, your laptop may have one of the following drive types. These logos are used to indicate each drive's capabilities and media compatibility.

DVD±R/W Dual Layer Writer	DVD±R/W drive can read CD-ROM, CD-R, CD-R/W, DVD, DVD+R/W, and DVD-R/W media. It can also record to CD-R, CD-RW, DVD+R/W, DVD-R/W, and DVD+R Dual Layer (DL) media.
Blu-ray Disc™ Reader/Writer	Blu-ray drive can read CD-ROM, CD-R, CD-R/W, DVD, DVD+R/W, DVD-R/W, DVD+R Dual Layer (DL), BD-ROM, BD-R, and BD-RE media. It can also record to CD-R, CD-R/W, DVD+R/W, DVD-R/W, DVD+R Dual Layer (DL), BD-R, and BD-RE media.

Using the Integrated Camera

Turning the Camera On and Off

Press the key combination <Fn><F9> to switch on or switch off the camera. After switching on the camera, you need to activate its function through the Microsoft Windows operating system. In addition, you can also use Windows Movie Maker to create, edit, and share videos.

Using the Wireless Control

The wireless control allows you to quickly turn all of your wireless radios (Bluetooth® and WLAN) off, such as when you are asked to disable all wireless radios on an airplane flight. Gently touching this control one time turns all of your radios off. Gently touching it again returns your wireless radios to their respective states they were in before you touched the control the first time.

Battery Pack

Your laptop is equipped with a high-energy rechargeable lithium ion (Li-ion) battery pack. Battery life will vary depending on your laptop configuration, model, applications installed, power management settings, and features used. As with all batteries, the maximum capacity of this battery will decrease with time and usage.

The battery meter lights on the battery pack indicate the charge level of the battery. When you press the battery meter once, the charge level lights illuminate. Each of the five lights represent approximately 20% of the total battery charge. For example, if four lights turn on, there is 80% of battery charge remaining and if no lights turn on, there is no charge remaining in the battery.

Power Management

Understanding Power Consumption

In order to fully utilize the power of your battery, it would be a good idea for you to spend some time acquiring a basic understanding of the power management concept from your operating system.

You can use the power options in your operating system to configure the power settings on your computer. The Microsoft® Windows® operating system installed on your computer provides three default options:

- Balanced — Offers full performance when you need it and saves power during periods of inactivity.
- Power Saver — Saves power on your computer by reducing system performance to maximize the life of the computer and by reducing the amount of energy consumed by your computer over its lifetime.
- High Performance — Provides the highest level of system performance on your computer by adapting processor speed to your activity and by maximizing system performance.

Customizing Your Power Settings:

1. Click **Start** → **Control Panel**.
2. Click **All Control Panel Items**.
3. Double-click the **Power Options** icon.
4. Select a power plan from the options shown. To customize specific settings, click **Change plan settings** next to the selected power plan.

Reducing Power Consumption

Although your laptop (together with the operating system) is capable of power conservation, there are measures you can take to reduce the power consumption:

- Use the AC power whenever possible.
- Lower the intensity of the display backlight. A very bright screen translates to higher power usage.
- Switch to the Stealth mode to activate additional system power savings. Switching into and out of Stealth mode may require a reboot depending on your computer configuration and the operating system.

NOTE: The battery pack should be locked in the battery compartment all the time.

Alienware Command Center

The Alienware® Command Center gives you access to Alienware's exclusive software and is a continuously upgradable control panel. As Alienware releases new programs, they download directly into the Command Center allowing you to build a library of system management, optimization, and customization tools. You can access Alienware Command Center by gently touching the touch control located near the top of the keyboard. The control will illuminate temporarily to confirm your selection. For the exact location of the control, see "Computer Base and Keyboard Features" on page 18.

Stealth Mode

Stealth mode is designed to reduce the processor and graphics utilization and thereby reduces the energy consumption and noise level of your computer.

NOTE: Stealth mode has no effect while the computer is running on battery power.

You can access Stealth mode by gently touching the touch control located near the top of the keyboard. The control will illuminate to full brightness until the function is deactivated. For the exact location of the control, see "Computer Base and Keyboard Features" on page 18.

Free Fall Sensor

Free fall sensor protects your computer hard drive from possible damage, by detecting a free fall state caused by accidentally dropping the computer. When a free fall state is detected, the hard drive is placed in a safe state to protect against damage to the read/write head and possible data loss. Your hard drive returns to normal operation, when the free fall state is no longer detected.

Configuring the BIOS

System Setup

The System Setup options allow you to:

- Change the system configuration information after you add, change, or remove any hardware in your laptop.
- Set or change a user-selectable option.
- View the installed amount of memory or set the type of hard drive installed.

Before you use System Setup, it is recommended that you write down the current System Setup information for future reference.

CAUTION: Do not change the settings in System Setup unless you are an expert computer user. Certain changes can cause your computer to work incorrectly.

Entering System Setup

1. Turn on (or restart) your laptop.
2. While the laptop is booting, press <F2> immediately before the operating system logo appears to access the **BIOS Setup Utility**.
   If an error occurs during POST (Power On Self Test), you may also enter the **BIOS Setup Utility** by pressing <F2> when prompted.

NOTE: If you wait too long and the operating system logo appears, continue to wait until you see the Microsoft® Windows® desktop, then shut down your laptop and try again.

NOTE: Keyboard failure may result when a key on the keyboard is held down for extended periods of time. To avoid possible keyboard failure, press and release <F2> in even intervals until the System Setup screen appears.

System Setup Screens

The **BIOS Setup Utility** window displays current or changeable configuration information for your laptop. Information is divided into five menus: **Main**, **Advanced**, **Security**, **Boot**, and **Exit**.

Key functions appear at the bottom of the **BIOS Setup Utility** window and lists keys and their functions within the active field.

System Setup Options

NOTE: Depending on your computer and installed devices, the items listed in this section may not appear, or may not appear exactly as listed.

NOTE: For the updated system setup information, see the *Service Manual* at **support.dell.com/manuals.**

Main Menu

System Time	Displays the system time.
System Date	Displays the system date.
Alienware	Displays the model number of your computer.
Service Tag	Displays the service tag of your computer.
BIOS Version	Displays the BIOS revision.
EC Version	Displays the EC firmware version.
CPU	Displays the type of processor.
CPU Speed	Displays the speed of the processor.
CPU Cache	Displays the processor cache size.
CPU ID	Displays the ID of the processor.

Main Menu

Total Memory	Displays the total memory available in your computer.
Memory Bank 0	Displays the memory size installed in memory bank 0.
Memory Bank 1	Displays the memory size installed in memory bank 1.

Advanced Menu

Wired Network	Allows you to enable or disable the on-board LAN controller. ▪ Disabled: Internal LAN is disabled and is not visible to the operating system. ▪ Enabled: Internal LAN is enabled.
Wireless Network	Allows you to enable or disable the internal wireless device. ▪ Disabled: The internal wireless device is disabled and is not visible to the operating system. ▪ Enabled: The internal wireless device is enabled.
Bluetooth Receiver	Allows you to enable or disable the internal Bluetooth device. ▪ Disabled: The internal Bluetooth device is disabled and is not visible to the operating system. ▪ Enabled: The internal Bluetooth device is enabled.

Advanced Menu	
High Definition Sound	Allows you to enable or disable the internal high definition audio device. ▪ Disabled: The internal audio device is disabled and is not visible to the operating system. ▪ Enabled: The internal audio device is enabled.
USB Emulation	Allows you to enable or disable the USB emulation feature. This feature defines how the BIOS, in the absence of a USB-aware operating system, handles USB devices. USB emulation is always enabled during POST (Power On Self Test). **NOTE:** You cannot boot any type of USB device (floppy, hard drive, or memory key) when this option is off.
Firewire	Allows you to enable or disable the IEEE 1394 A connector. ▪ Disabled: The IEEE 1394 A connector is disabled and is not visible to the operating system. ▪ Enabled: The IEEE 1394 A connector is enabled.
Performance Options	Allows you to configure fields in the Performance Options sub-menu (for more information, see "Performance Options Sub-Menu" on page 31).

Advanced Menu	
SATA Operation	Allows you to configure the operating mode of the integrated SATA hard drive controller. ▪ ATA: SATA is configured for ATA mode. ▪ AHCI: SATA is configured for AHCI mode. ▪ RAID: SATA is configured for RAID mode.
SATA Hard Drive 1	Displays the installed primary SATA hard drive model.
SATA Hard Drive 2	Displays the installed secondary SATA hard drive model.
SATA Optical Drive	Displays the installed SATA optical drive model.

Performance Options Sub-Menu

CPU Speed	Displays the speed of the processor.
Memory Frequency	Displays the frequency of the memory.
Memory Channel Mode	Displays the memory channel modes. ▪ Single ▪ Dual
CPU Performance Mode	Indicates if the processor is in turbo mode or not.
Turbo Mode	Allows you to enable or disable the turbo mode.
DDR3 Voltage	Allows you to enter the memory voltage.
CPU Vcore	Allows you to set the processor Vcore voltage.
CPU Frequency Over-Clocking	Allows you to configure the processor over-clocking frequency.

Security Menu

System Password Status	Displays the status of the system password. The system password is also known as the Master/Supervisor password. ▪ Enabled: The system password is enabled. ▪ Not Enabled: The system password is not enabled.
Set System Password	Allows you to set the system password. The system password controls access to the system setup utility.
User Password Status	Displays the status of the user password. ▪ Enabled: The user password is enabled and the built-in PS/2 compatible mouse controller is enabled. ▪ Not Enabled: The user password is not enabled and the built-in PS/2 compatible mouse controller is disabled.
Set User Password	Allows you to set the user password. The user password controls access to the computer at boot.
Enable Password on Boot	Allows you to enable or disable password entry on boot.
Failsafe	Allows you to enable or disable the Phoenix FailSafe™ security software to protect, track, and manage your laptop and your digital files if your laptop is lost or stolen.
Asset Tag	Displays the asset tag.

Power Menu

A/C Adapter Rating	Displays the AC adapter rating.
A/C Adapter Warnings	Allows you to choose if the computer should display warning messages when you use certain power adapters. The computer displays these messages if you attempt to use a power adapter that has too little capacity for your configuration.
USB Wake Support	Allows you to enable USB devices to wake the computer from standby mode or to disable the USB wake support feature.
USB Power Share	Allows you to enable USB-chargeable devices to charge when the computer is turned off or in standby mode or to disable the USB power share feature.

Boot Menu

Use the plus (+) or minus (-) keys to change the boot device priority. You can choose from:

- Hard Drive
- USB Storage
- CD\DVD\BD
- Removable Devices
- Network

Exit Menu

Exit Saving Changes	Allows you to exit System Setup and save your changes to CMOS.
Exit Discarding Changes	Allows you to exit utility without saving System Setup data to CMOS.
Load Setup Defaults	Allows you to load default values for all System Setup items.
Discard Changes	Allows you to load previous values from CMOS for all System Setup items.
Save Changes	Allows you to save System Setup data to CMOS.

CHAPTER 4: INSTALLING ADDITIONAL OR REPLACEMENT COMPONENTS

This chapter provides guidelines and instructions for increasing the processing power and storage space, by upgrading equipment. You can purchase components for your computer at **www.dell.com** or **www.alienware.com**.

NOTE: See the *Service Manual* at **support.dell.com/manuals** for installation instructions of all serviceable components. Parts purchased from Dell and Alienware will ship with specific replacement instructions.

Before You Begin

This section provides procedures for removing and installing the components in your laptop. Unless otherwise noted, each procedure assumes that the following conditions exist:

- You have performed the steps in "Turning Off Your Computer" and "Before Working Inside Your Computer" in this section.
- You have read the safety information that shipped with your computer.
- A component can be replaced or—if purchased separately—installed by performing the removal procedure in reverse order.

Turning Off Your Computer

CAUTION: To avoid losing data, save and close all open files and exit all open programs before you turn off your laptop.

1. Save and close all open files and exit all open programs.
2. Click **Start** → **Shut Down**.
   The laptop turns off after the operating system shutdown process finishes.
3. Ensure that the computer is turned off. If your computer did not automatically turn off when you shut down your operating system, press and hold the power button until the computer turns off.

Before Working Inside Your Computer

Use the following safety guidelines to help protect your computer from potential damage and to help to ensure your own personal safety.

WARNING: Before working inside your laptop, read the safety information that shipped with your computer. For additional safety best practices information, see the Regulatory Compliance Homepage at www.dell.com/regulatory_compliance.

CAUTION: Handle components and cards with care. Do not touch the components or contacts on a card. Hold a card by its edges. Hold a component such as a processor by its edges, not by its pins.

CAUTION: Only a certified service technician should perform repairs on your computer. Damage due to servicing that is not authorized by Dell is not covered by your warranty.

CAUTION: To avoid electrostatic discharge, ground yourself by using a wrist grounding strap or by periodically touching an unpainted metal surface (such as a connector on the back of the computer).

CAUTION: When you disconnect a cable, pull on its connector or on its pull-tab, not on the cable itself. Some cables have connectors with locking tabs; if you are disconnecting this type of cable, press in on the locking tabs before you disconnect the cable. As you pull connectors apart, keep them evenly aligned to avoid bending any connector pins. Also, before you connect a cable, ensure that both connectors are correctly oriented and aligned.

CAUTION: To avoid damaging the computer, perform the following steps before you begin working inside the computer.

1. Ensure that the work surface is flat and clean to prevent the computer cover from being scratched.
2. Turn off your computer (see "Turning Off Your Computer" on page 34).

CAUTION: To disconnect a network cable, first unplug the cable from your computer and then unplug the cable from the network device.

3. Disconnect all telephone or network cables from the laptop.
4. Press and eject any installed cards from the ExpressCard slot and the Media Card slot.
5. Disconnect your computer and all attached devices from their electrical outlets.

CAUTION: To help prevent damage to the system board, you must remove the battery from the battery bay before you service the laptop.

6. Remove the battery from the battery bay (see "Replacing the Battery Pack" on page 36).
7. Press the power button to ground the system board.

Replacing the Battery Pack

This battery pack can easily be removed and replaced. Ensure that the laptop is properly shut down before changing the battery pack.

CAUTION: To avoid damage to the laptop, use only the battery designed for this particular Alienware laptop. Do not use batteries designed for other Alienware or Dell laptops.

To remove the battery pack:

1. Follow the instructions in "Before You Begin" on page 34.
2. Shut down the laptop.
3. Turn the laptop over.
4. Slide the battery latch to the unlock position as shown.
5. The battery pack will pop up.
6. Remove the battery pack.

To replace the battery pack:

1. Follow the instructions in "Before You Begin" on page 34.
2. Align the three battery pack tabs with the slots in the battery bay.
3. Push the battery pack into the battery bay until the battery pack clicks into place.

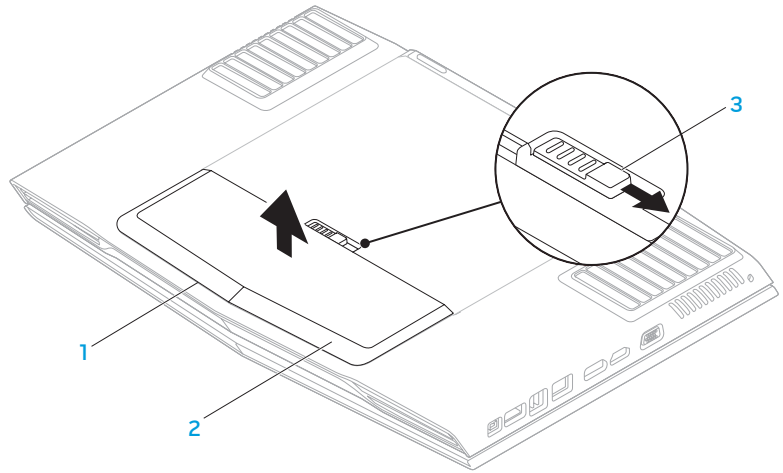

1 battery bay
2 battery pack
3 battery latch

Upgrading or Replacing Memory

Your laptop is equipped with a configurable memory unit. The industry standard JEDEC DDR3 SODIMM memory module connectors are available for memory upgrade. The table below illustrates all the possible ways system memory can be configured.

Memory connector #1	Memory connector #2	Total Memory
2 GB	2 GB	4 GB
2 GB	4 GB	6 GB
4 GB	2 GB	6 GB
4 GB	4 GB	8 GB

Removing the Memory Module(s)

1. Follow the instructions in "Before You Begin" on page 34.
2. Remove the battery pack (see "Replacing the Battery Pack" on page 36).
3. Loosen the two captive screws that secure the compartment door to the computer base.
4. Slide the compartment door towards the front of the computer and then lift it up.

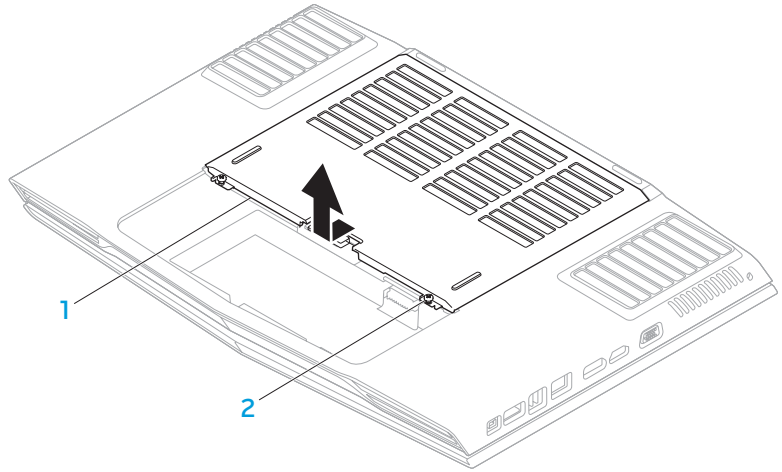

1 compartment door

2 captive screws (2)

5. Loosen the captive screw that secures the memory-module door to the computer base.
6. Slide the memory-module door to release the tabs and lift the memory-module door out of the computer base.

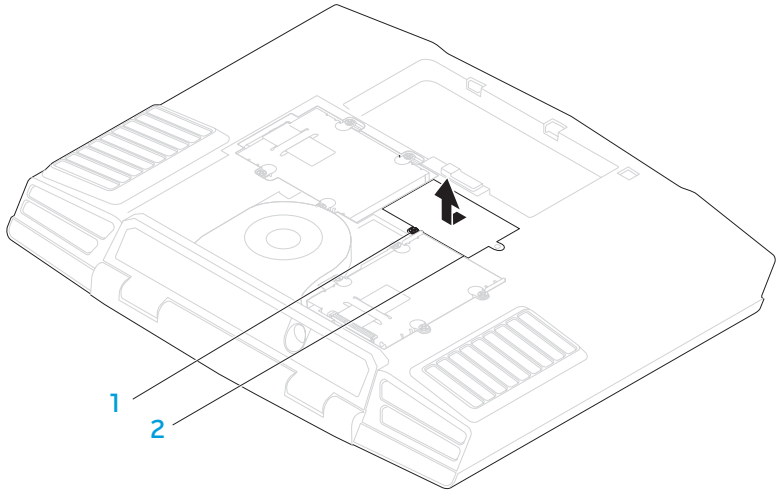

1 captive screw
2 memory-module door

7. Use your fingertips to carefully spread apart the memory-module connector's spring-locks until the memory module pops up.
8. Remove the memory module.

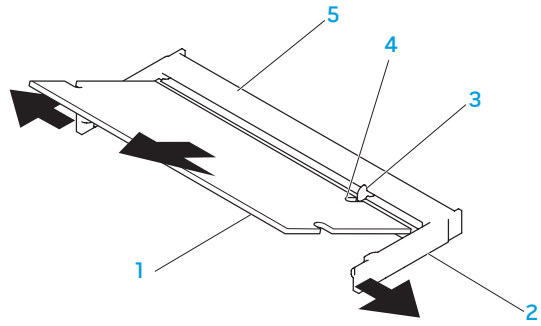

1 memory module
2 spring locks (2)
3 tab
4 notch
5 memory-module connector

To replace the memory modules, perform the removal steps in reverse order. While inserting the memory module into the memory-module connector, align the notch on the memory module to the tab on the memory-module connector.

NOTE: Install the memory module first in the bottom connector and then in the top connector.

NOTE: If the memory module is not installed properly, the computer may not boot.

Upgrading or Replacing the Hard Drive(s)

Your laptop is equipped with two hard drive sockets.

Removing the Hard Drive(s)

1. Follow the instructions in "Before You Begin" on page 34.
2. Remove the battery pack (see "Replacing the Battery Pack" on page 36).
3. Loosen the two captive screws that secure the compartment door to the computer base.
4. Slide the compartment door towards the front of the computer and then lift it up.

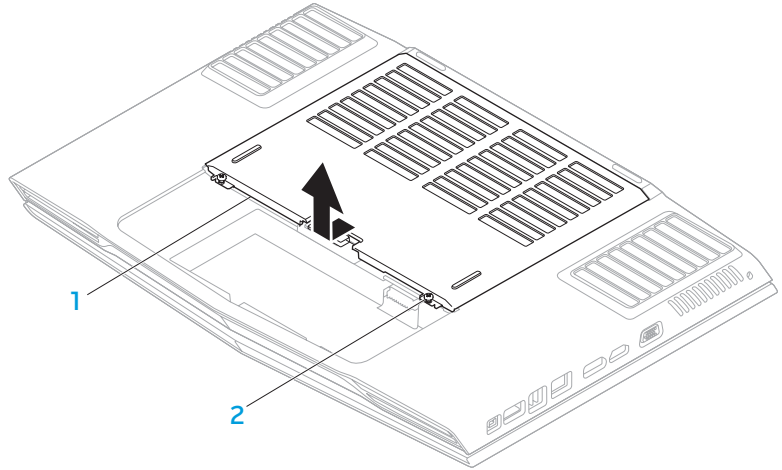

1 compartment door

2 captive screws (2)

5. Loosen the four captive screws on the primary hard drive (HDD0).
6. Slide the primary hard drive (HDD0) towards the back using the pull tab and lift the primary hard drive out of the computer base.

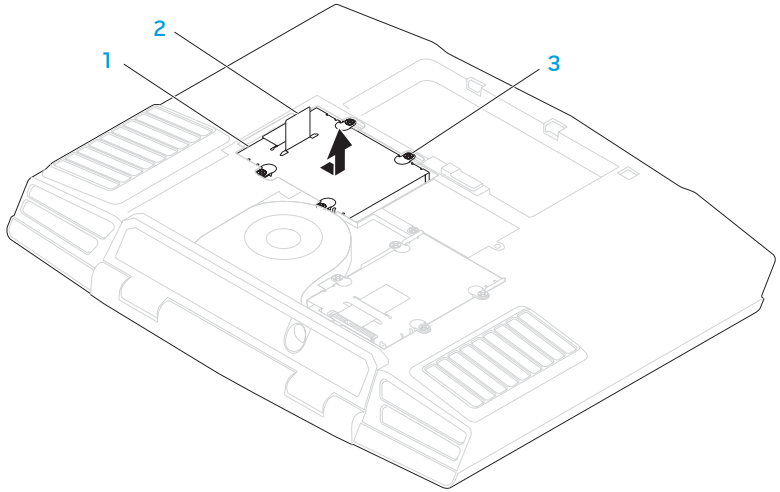

1 primary hard drive
2 pull tab
3 captive screws (4)

7. Loosen the four captive screws on the secondary hard drive (HDD1).
8. Using the pull tab, lift the secondary hard drive (HDD1) out of the computer base.

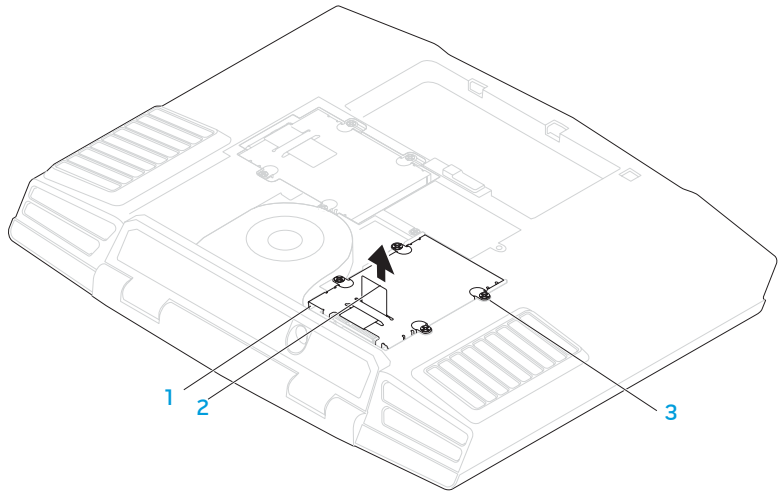

1 secondary hard drive
2 pull tab
3 captive screws (4)

9. Remove the four screws that secure the hard drive to the hard-drive bracket.
10. Lift the hard drive out of the hard-drive bracket.

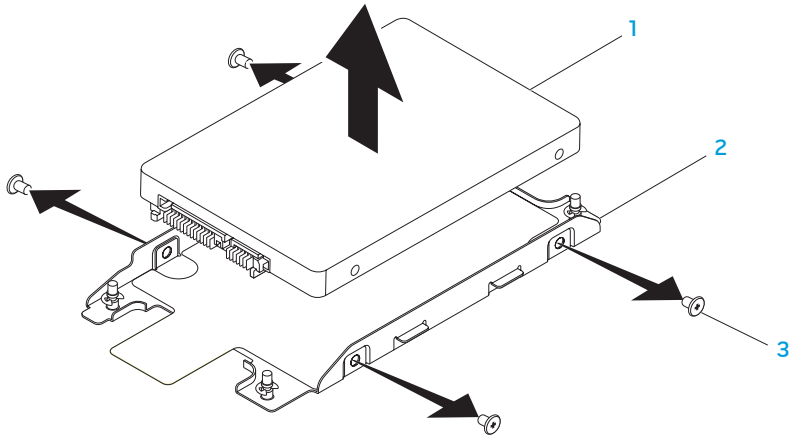

1 hard drive
2 hard-drive bracket
3 screws (4)

11. Remove the interposer from the hard drive.

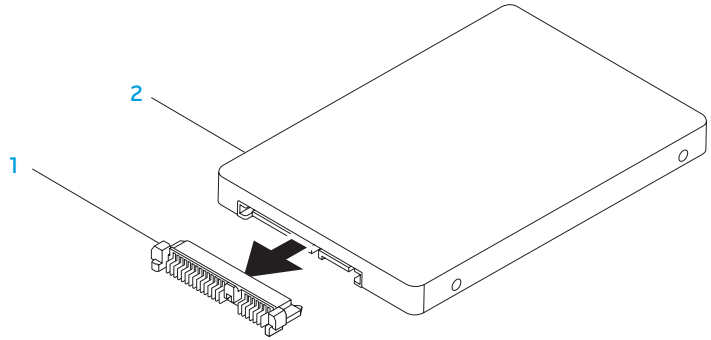

1 interposer
2 hard drive

To replace the hard drive(s), perform the removal steps in reverse order.

CHAPTER 5: TROUBLESHOOTING

Basic Hints and Tips

- Computer does not power on: Is your AC adapter cable securely connected to a working electrical outlet? If connected to a power strip, ensure that the strip is actually working.
- Connections: Check all the cables to ensure that there are no loose connections anywhere.
- Power Savings: Ensure that your computer is not in hibernate or standby mode by pressing the power button for less than 4 seconds. The power status light will fade from blue to black while in standby mode; in hibernate mode it will be off.
- Brightness: Check and adjust the brightness of the display by pressing the key combinations <Fn><F4> or <Fn><F5>.
- Display Choice: Press the key combination <Fn><F6> to ensure that the computer is not set to "External Only" display.
- Use only the AC adapter that shipped with your laptop.

Backup and General Maintenance

- Always backup your important data on a regular basis and keep copies of your operating system and software safe. Do not forget to note the serial numbers if you are storing them outside of their original cases - e.g., in a CD wallet.
- Run maintenance programs as often as you can. You may schedule these programs to run at times when you are not using your computer. You can use those provided with your operating system, or buy more powerful, dedicated programs to do so.
- Write down your passwords and keep them safe (away from your computer). This is especially important if you choose to password-protect your computer's BIOS and operating system.
- Document vital settings such as network, dialup, mail and Internet settings.

When troubleshooting your computer, remember the following safety guidelines:

- Before touching any of the computer's internal components, touch an unpainted portion of the chassis. Doing so will safely discharge any static electricity, which could damage your computer.
- Turn off your computer and any connected peripherals.
- Disconnect any peripherals from your computer.

Things to check before troubleshooting:

- Ensure that the AC adapter cable is properly connected between your computer and a grounded, three-prong power outlet. Ensure that the power outlet is working.
- Ensure the UPS or power strip is turned on (if applicable).
- If your peripheral devices (e.g. keyboard, mouse, printer, etc.) are not working, ensure that all connections are secure.
- If any computer components were added or removed before the problem began, check to see if you performed the installation or removal procedures properly.
- If an error message appears on the screen, write down the exact error message prior to calling Technical Support to aid in diagnosing and resolving your issue.
- If an error occurs in a specific program, see the program's documentation.

Software Diagnostic Tools

Pre-Boot System Assessment (PSA)

The computer runs the Pre-boot System Assessment (PSA), a series of initial tests of your system board, keyboard, display, memory, hard drive, etc.

To invoke PSA:

1. Turn on (or restart) your computer.
2. Press <F12> to access the **Boot Menu**.
3. Select **Diagnostics** from the menu and press <Enter>.

During the assessment, answer any questions that appear.

- If a failure is detected, the computer stops and beeps. To stop the assessment and restart the computer, press <n>; to continue to the next test, press <y>; to retest the component that failed, press <r>.
- If failures are detected during the Pre-boot System Assessment, write down the error code(s) and contact Alienware (see "CONTACTING ALIENWARE" on page 61).

If the Pre-boot System Assessment completes successfully, the following message appears "`Do you want to run the remaining memory tests? This will take about 30 minutes or more. Do you want to continue? (Recommended).`"

If you are experiencing memory issues, press <y> else press <n>. The following message is displayed: "`Pre-boot System Assessment complete.`"

Press <o> to reboot your computer.

Alienware® Diagnostics

If you experience a problem with your Alienware laptop, run the Alienware Diagnostics before you contact Alienware for technical assistance. It is recommended that you print these procedures before you begin.

NOTE: Back up all data before initiating a system recovery. It is recommended to backup critical files onto an external media before initiating recovery.

NOTE: The Resource DVD contains drivers for your computer. You can also download the latest drivers and software for your computer from **support.dell.com**.

Review your laptop's configuration information, and ensure that the device that you want to test displays in the system setup program and is active. Start the Alienware Diagnostics from the Resource DVD.

Starting Alienware Diagnostics From the Resource DVD

1. Insert the Resource DVD.
2. Shut down and restart the laptop.
   When the Alienware logo appears, press <F12> immediately.

NOTE: If you wait too long and the operating system logo appears, continue to wait until you see the Microsoft® Windows® desktop; then, shut down your computer and try again.

NOTE: The next steps change the boot sequence for one time only. On the next start-up, the computer boots according to the devices specified in the system setup program.

3. When the boot device list appears, highlight **CD/DVD/CD-RW** and press <Enter>.
4. Select **Boot from CD-ROM** from the menu that appears and press <Enter>.
5. Select **Alienware Diagnostics** from the numbered list. If multiple versions are listed, select the version appropriate for your computer.
6. When the Alienware Diagnostics **Main Menu** appears, select the test you want to run.

NOTE: Write down any error codes and problem descriptions exactly as they appear and follow the instructions on the screen.

7. After all tests have completed, close the test window to return to the Alienware Diagnostics **Main Menu**.
8. Remove your Resource DVD, then close the **Main Menu** window to exit the Alienware Diagnostics and restart the computer.

Answers to Common Problems

System

The computer fails the POST

The POST (Power On Self Test) tests the computer, ensuring that it meets the necessary system requirements and that all hardware is working properly before starting the remainder of the boot process. If the computer passes the POST, the computer will continue to start normally. However, if the computer fails the POST, the computer will generate a single beep to indicate a general failure and an error message will be displayed. For assistance, contact Technical Support (see "CONTACTING ALIENWARE" on page 61).

The computer stops responding or a solid blue screen appears

CAUTION: You might lose data if you are unable to perform an operating system shutdown.

If you are unable to get a response by pressing a key on your keyboard or moving your mouse, press and hold the power button for at least 6 seconds until the computer turns off, then restart your computer.

NOTE: The chkdsk program may run when you restart the computer. Follow the instructions on the screen.

A program stops responding or crashes repeatedly

End the program:

1. Press <Ctrl><Shift><Esc> simultaneously.
2. Click the **Applications** tab and select the program that is no longer responding.
3. Click **End Task**.

Check the software documentation.

If necessary, uninstall and then reinstall the program.

A program is designed for an earlier version of Microsoft® Windows®

Run the Program Compatibility Wizard:

The **Program Compatibility Wizard** configures a program so that it runs in an environment similar to an earlier version of Microsoft Windows operating system environments.

1. Click **Start** → **Control Panel**→ **Programs**→ **Programs and Features**→ **Use an older program with this version of Windows**.
2. In the welcome screen, click **Next**.
   Follow the instructions on the screen.

Other software problems

Back up your files immediately

Use a virus-scanning program to check the hard drive, or CDs

Save and close any open files or programs and shut down your computer through the Start menu

Scan the computer for spyware:

If you are experiencing slow computer performance, you frequently receive pop-up advertisements, or you are having problems connecting to the Internet, your computer might be infected with spyware. Use an anti-virus program that includes anti-spyware protection (your program may require an upgrade) to scan the computer and remove spyware.

Run the PSA Diagnostics:

If all tests run successfully, the error condition is related to a software problem.

Check the software documentation or contact the software manufacturer for troubleshooting information:

- Ensure that the program is compatible with the operating system installed on your computer.
- Ensure that your computer meets the minimum hardware requirements needed to run the software. See the software documentation for information.
- Ensure that the program is installed and configured properly.
- Verify that the device drivers do not conflict with the program.
- If necessary, uninstall and then reinstall the program.

Hard Drive Problems

Allow the computer to cool before turning it on

A hot hard drive may prevent the operating system from starting. Try allowing the computer to return to room temperature before turning it on.

Run Check Disk

1. Click **Start** → **Computer**.
2. Right-click **Local Disk C:**.
3. Click **Properties**→ **Tools**→ **Check Now**.
   If the **User Account Control** window appears, click **Continue**.

   Follow the instructions on the screen.

Memory

Memory errors detected on startup

- Check memory modules for correct seating and orientation. Reseat the memory modules if applicable (see "Upgrading or Replacing Memory" on page 37).
- Computers using a dual-channel memory configuration require that memory modules be installed in pairs. If you require assistance, contact Technical Support (see "CONTACTING ALIENWARE" on page 61).

Display

If the display is blank

NOTE: If you are using a program that requires a higher resolution than your computer supports, it is recommended that you attach an external monitor to your computer.

The computer may be in a power saving mode:

Press a key on the keyboard or press the power button to resume normal operation.

Switch the video image:

If your computer is attached to an external monitor, press <Fn><F6> to switch the video image to the display.

Power

When you press the power button, the computer does not turn on

- If the AC adapter cable is connected to a surge protector or UPS, ensure that the surge protector or UPS is securely connected to an electrical outlet, is switched on and is working correctly.
- Check that the wall outlet is working properly by testing another device such as a radio or lamp that you know works. If the wall outlet is not working, contact an electrician or your power company for further assistance.

  If the problem persists, contact Alienware support (see "CONTACTING ALIENWARE" on page 61).

CHAPTER 6: SYSTEM RECOVERY

Your computer has the following system recovery options:

- **Operating System Reinstallation DVD** — Contains operating system installation media.
- **AlienRespawn/DataSafe Local** — Your computer is pre-installed with AlienRespawn/DataSafe Local (see "AlienRespawn/DataSafe Local Backup" on page 52).
- **Dell DataSafe Online** — Dell DataSafe Online is an online data backup service (see "Dell DataSafe Online Backup" on page 53).
- **System Drivers** — You can download the latest drivers for your computer from **support.dell.com**.
- **Resource DVD** — Contains drivers for your computer. You can also download the latest system drivers from **support.dell.com**.
- **System Applications** — Some of the software that is pre-installed on your computer does not include a backup CD/DVD. This software is available at **My Dell Downloads** (**DownloadStore.dell.com/media**).

NOTE: My Dell Downloads may not be available in all regions.

AlienRespawn/DataSafe Local Backup

CAUTION: Using AlienRespawn/DataSafe Local Backup permanently removes any programs or drivers installed after you received your computer. Create backup media of applications you need to reinstall on your computer before using AlienRespawn/DataSafe Local Backup. Use AlienRespawn/DataSafe Local Backup only if System Restore did not resolve your operating system problem.

CAUTION: Although AlienRespawn/DataSafe Local Backup is designed to preserve the data files on your computer, it is recommended that you backup your data files before usingAlienRespawn/DataSafe Local Backup.

NOTE: AlienRespawn/DataSafe Local Backup may not be available in all regions

You can use AlienRespawn/DataSafe Local Backup to restore your hard drive to the operating state it was in when you purchased your computer, while preserving the data files.

AlienRespawn/DataSafe Local Backup allows you to:

- Backup and restore your computer to an earlier operating state
- Create system recovery media

AlienRespawn/DataSafe Local Backup Basic

To restore the factory image while preserving the data files:

1. Turn off your computer.
2. Disconnect all devices (USB drive, printer, etc.) connected to the computer and remove any newly added internal hardware.

NOTE: Do not disconnect the AC adapter

3. Turn on your computer.
4. When the Alienware logo appears, press <F8> several times to access the **Advanced Boot Options** window.

NOTE: If you wait too long and the operating system logo appears, continue to wait until you see the Microsoft Windows desktop; then, shut down your computer and try again.

5. Select **Repair Your Computer**.
6. Select **AlienRespawn/DataSafe Restore and Emergency Backup** from the **System Recovery Options** menu and follow the instructions on the screen.

NOTE: The restoration process may take an hour or more depending on the size of the data to be restored.

NOTE: For more information on AlienRespawn, see knowledge base article 353560 at **support.dell.com**.

AlienRespawn/DataSafe Local Backup Professional

AlienRespawn/DataSafe Local Backup Professional provides additional features that allow you to:

- Backup and restore your computer based on file types
- Backup files to a local storage device
- Schedule automated backups

To upgrade to AlienRespawn/DataSafe Local Backup Professional:

1. Double-click the AlienRespawn/DataSafe Local Backup Professional icon in the notification area of your desktop.
2. Click **Upgrade Now!**
3. Follow the instructions on the screen.

DataSafe Online Backup

NOTE: Dell DataSafe Online is supported only on Windows operating systems.

NOTE: A broadband connection is recommended for fast upload/download speeds.

Dell DataSafe Online is an automated backup and recovery service that helps protect your data and other important files from catastrophic incidents like theft, fire, or natural disasters. You can access the service on your computer using a password-protected account.

For more information, go to **delldatasafe.com**.

To schedule backups:

1. Double-click the Dell DataSafe Online icon on the taskbar.
2. Follow the instructions that appear on the screen.

My Dell Downloads

NOTE: My Dell Downloads may not be available in all regions.

Some of the software pre-installed on your new Dell computer do not include a backup CD or DVD. This software is available on the My Dell Downloads website. From this website you can download available software for reinstallation or create your own backup media.

To register and use My Dell Downloads:

1. Go to **DownloadStore.dell.com/media.**
2. Follow the instructions on the screen to register and download the software.
3. Reinstall the software or create a backup media for future use.

CHAPTER 7: BASIC SPECIFICATIONS

This chapter provides the basic specifications of your computer. For more detailed specifications, see the *Comprehensive Specifications* at **support.dell.com/manuals**.

Computer Model

Alienware M17x-R2

Dimensions

Height (Front to Back)	51.31 mm to 53.59 mm (2.02 inches to 2.11 inches)
Width	405.89 mm (15.98 inches)
Depth	321.31 mm (12.65 inches)
Weight with 9-cell battery (starting at)	5.3 kg (11.8 lb) **NOTE**: The weight of your laptop will vary depending on the configuration ordered and the manufacturing variability.

Processor and System Chipset

Processor	Intel® Core™ i7 Intel Core i5
System chipset	Mobile Intel PM55

Memory

Connectors	two internally-accessible SODIMM sockets
Capacities	2 GB and 4 GB memory modules
Memory types	DDR3 1067 MHz, 1333 MHz (dual-channel configurations) **NOTE**: DDR3 1333 MHz memory is supported only on computers with an Intel Core i7 processor.
Memory configurations possible	4 GB, 6 GB, and 8 GB

Ports and Connectors

IEEE 1394 A	one 4-pin serial connector
Network adapter	one RJ45 connector 10/100/1000 Mbps
USB	four 4-pin USB 2.0-compliant connectors
eSATA/USB combo	one 11-pin eSATA/USB combo connector
VGA	one 15-hole connector
DisplayPort	one 20-pin connector
HDMI	one 19-pin connector
Audio	one microphone connector, three stereo headphone/speaker connectors

Ports and Connectors

ExpressCard	one ExpressCard/54 connector
8-in-1 Media Card Reader	one combo connector
Infrared	one RC6 Consumer IR port

AC Adapter

Type	240 W/150 W **NOTE**: The 150 W AC adapter supports computers with a single graphics card and a non-Extreme Edition processor. Other configurations require the 240 W AC adapter.
Output current (continuous)	12.31 A (240 W) 7.7 A (150 W)
Rated output voltage	19.5 VDC

Communications

Network adapter	10/100/1000 Mbps Ethernet LAN on system board
Wireless	▪ WLAN Mini-Card (half Mini-Card slot) ▪ WPAN, Bluetooth card (full Mini-Card slot)

Drives/Cards Supported

Optical drive	SATA-compliant Blu-ray Disc™ writer, Blu-ray Disc combo, or DVD+/-RW
Hard drives	two 2.5-inch drive bays supporting: ▪ SATA-II hard drive ▪ Solid-state hard drives
Media Card Reader card types	▪ Secure Digital (SD) memory card ▪ Secure Digital High Capacity (SDHC) card ▪ Secure Digital Input/Output (SDIO) card ▪ Multi Media Card (MMC) ▪ Memory Stick ▪ Memory Stick PRO ▪ xD-Picture Card (type - M and type - H) ▪ Hi Density-SD (SDHD)

Video

Type	up to two MXM 3.0 Type B compliant cards with total power budget of 150 W

Display	
Type	▪ 17.0 inch, dual-CCFL, WXGA+ (1440 x 900) ▪ 17.0 inch, RGBLED, WUXGA (1920 x 1200)

Keyboard (Backlit)	
Layouts	U.S. and Canada; Europe; Japan

Camera	
Pixel	2.0 megapixel

Battery	
Type	9-cell "smart" lithium ion (86 Whr)
Depth	52.3 mm (2.06 inches)
Height	41.54 mm (1.63 inches)
Width	292.7 mm (11.52 inches)
Weight	0.52 kg (1.14 lb)
Voltage	11.1 VDC

Battery	
Operating time	Battery operating time varies depending on operating conditions and can be significantly reduced under certain power-intensive conditions.
Life span (approximate)	300 discharge/charge cycles
Temperature range	
Operating	0° to 50°C (32° to 122°F)
Storage	–20° to 60°C (–4° to 140°F)
Coin-cell battery	CR-2032

APPENDIX A: GENERAL AND ELECTRICAL SAFETY PRECAUTIONS

Computer Setup

- Read all instructions marked on the product and in the documentation before operating your computer.
- Retain all safety and operating instructions.
- Never use this product near water or a heat source.
- Only set-up the computer on a stable work surface.
- Only operate the computer using the power source type indicated on the rating label.
- Never block or cover any openings or fans in the computer case. These are required for ventilation.
- Never insert objects of any kind into the ventilation openings.
- Ensure that your computer is properly grounded when in use.
- Do not attempt to connect your computer into an outlet that is not properly grounded.
- If an extension cord is used with your computer, ensure that the total ampere rating on the computer does not exceed the maximum rating on the extension cord.

Computer Use

- Route the power cable and all cables away from where people might walk or trip over them. Do not allow anything to rest on the power cable.
- Do not spill anything on or into your computer.
- To avoid electrical shock, always disconnect all power, modem and any other cables from the wall outlets before handling the computer.

Electrostatic Discharge (ESD) Warning

Electrostatic Discharge (ESD) can cause damage to internal system components if precautions are not taken. ESD is caused by static electricity and the damage caused is usually permanent.

Computer technicians wear a special wrist-strap that grounds them to the computer's case to prevent ESD damage. You can reduce the chances of ESD damage by doing the following:

- Turn off your computer's power and wait several minutes before starting to work.
- Ground yourself by touching the case of the computer.
- Touch only those items which must be replaced.
- Avoid walking around while replacing items inside the case, especially if you are on a carpet or during low temperature and low humidity.
- If you have to remove peripheral cards for any reason, place them on the portion of the computer's case that was removed. Do not touch the edge connectors at the bottom of the card that connect to the system board.

General Safety Precautions

- Mechanical Shock: Your computer should never be subjected to severe mechanical shocks. Careless handling of your computer may cause damage. Mechanical Shock is not covered by the warranty.
- Electrical Shock: If you do not open up your computer, there is nothing to worry about. Your computer protects itself against most irregularities in the power source.

When You Should Contact Alienware

- The battery, power cable or connector is damaged.
- Your computer has had liquid spilled into it.
- Your computer was dropped or the case was damaged.
- Normal operation of the computer does not occur when the operating instructions are followed.

Replacement Components or Accessories

It is only advised to use replacement parts or accessories recommended by Alienware.

APPENDIX B: CONTACTING ALIENWARE

NOTE: If you do not have an active Internet connection, you can find contact information on your purchase invoice, packing slip, bill, or Dell product catalog.

Dell provides several online and telephone-based support and service options. Because availability varies by country and product, some services may not be available in your area.

To contact Dell for sales, technical support, or customer service issues:

1. Visit **www.dell.com/contactdell**.
2. Select your country or region.
3. Select the appropriate service or support link based on your need.
4. Choose the method of contacting Dell that is convenient for you.

Websites

You can learn about Alienware products and services on the following websites:

- **www.dell.com**
- **www.dell.com/ap** (Asian/Pacific countries only)
- **www.dell.com/jp** (Japan only)
- **www.euro.dell.com** (Europe only)
- **www.dell.com/la** (Latin American and Caribbean countries)
- **www.dell.ca** (Canada only)

You can access Alienware Support through the following websites:

- **support.dell.com**
- **support.jp.dell.com** (Japan only)
- **support.euro.dell.com** (Europe only)
- **support.la.dell.com** (Argentina, Brazil, Chile, Mexico)

Printed in China.